FPYL-510-XXT

Green Diode Laser System

Specifications

Wavelength (nm)	510±5
Operating Mode	CW
Output Power (mW)	1 – 30*
Power Stability (RMS, over 4 hours)	<1%, <3%; <5%*
Transverse Mode	Near TEM_{00}
Beam Diameter at the Aperture (mm)	~3
Beam Divergence (full angle) (mrad)	1.0
Warm-up Time (minutes)	<5
Pointing Stability after Warm-up (mrad)	<0.05
Beam Height from Base Plate (mm)	24.8
Operating Temperature (°C)	10 - 35
Expected Lifetime (hours)	10000

* To be specified

FRANKFURT LASER COMPANY
An den 30 Morgen 13, 61381 Friedrichsdorf, Germany
Tel.: +49(0)6172.27978-0 Fax: +49(0)6172.27978-10
E-mail: sales@frlaserco.com; Internet: **WWW.FRLASERCO.COM**

Laser Head Drawing

139(L)×73(W) ×46. 2(H) mm^3, 0.6kg

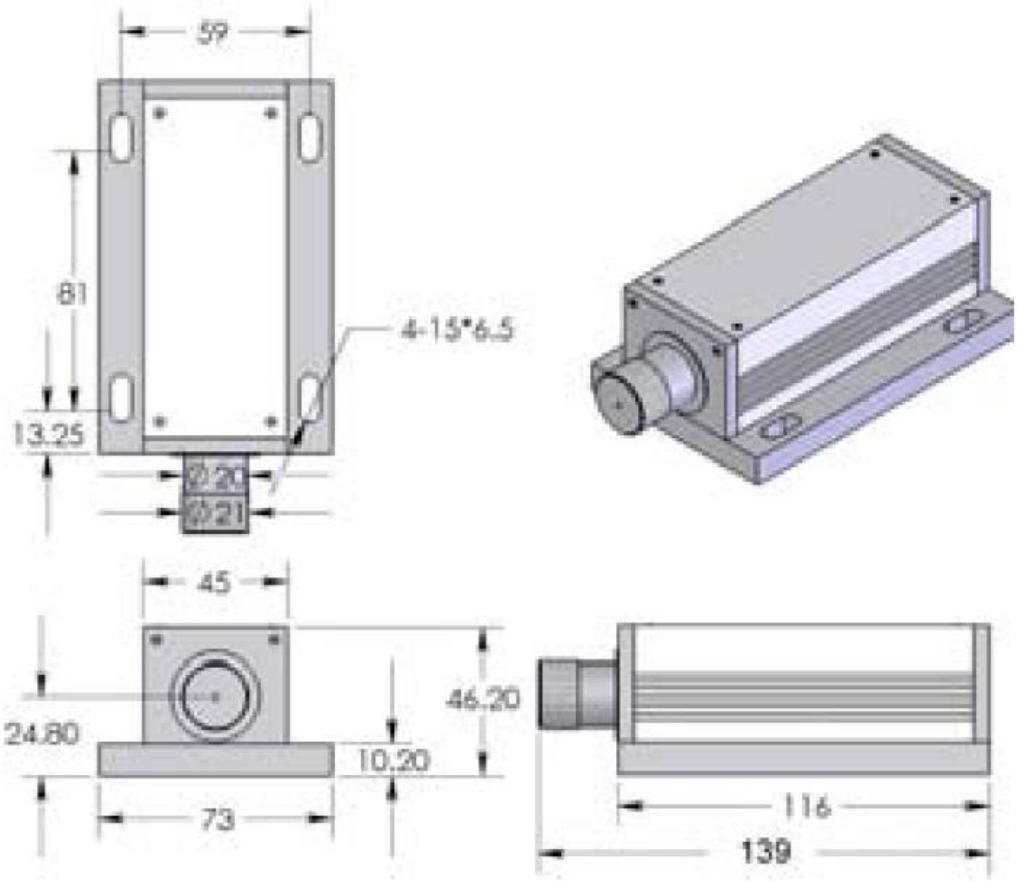

FRANKFURT LASER COMPANY
An den 30 Morgen 13, 61381 Friedrichsdorf, Germany
Tel.: +49(0)6172.27978-0 Fax: +49(0)6172.27978-10
E-mail: sales@frlaserco.com; Internet: **WWW.FRLASERCO.COM**

Power Supply Drawing

133 (L) ×130(W) ×65 (H) mm^3, 1.2kg

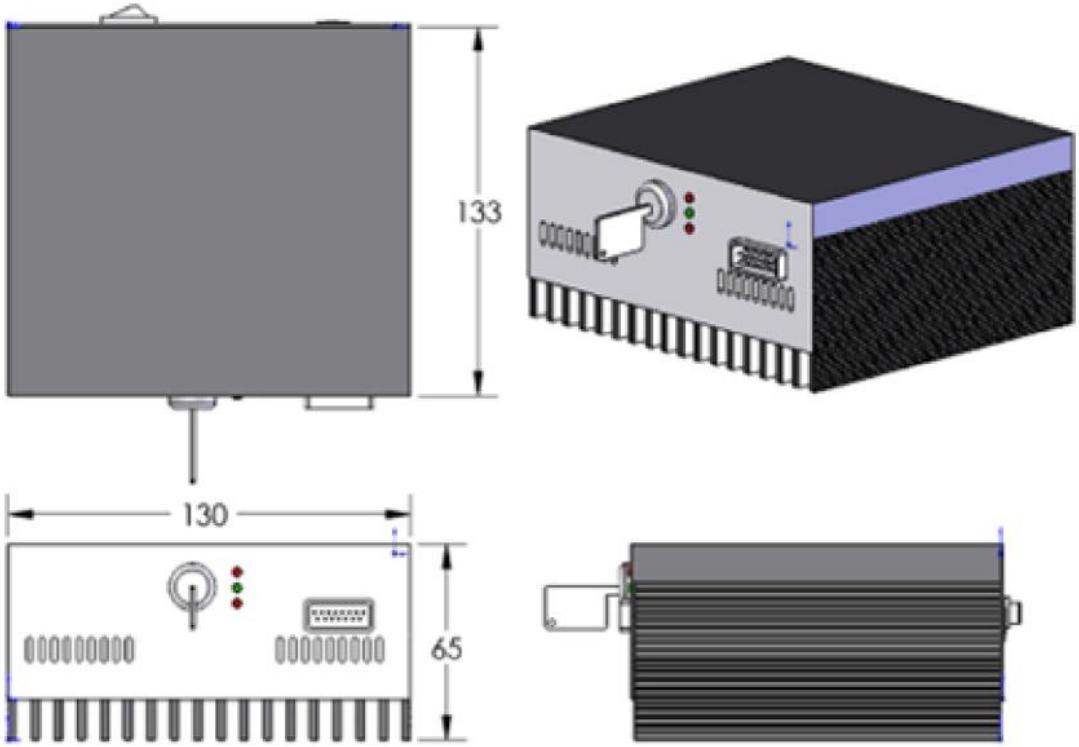

FRANKFURT LASER COMPANY
An den 30 Morgen 13, 61381 Friedrichsdorf, Germany
Tel.: +49(0)6172.27978-0 Fax: +49(0)6172.27978-10
E-mail: sales@frlaserco.com; Internet: **WWW.FRLASERCO.COM**