Multi-Chip Modules

IR Multimode SemiNex Lasers
10,15,20,25 and 50 watt versions
Bundled or Single Core fiber options

Applications
- OEM Medical
- DPSS pump source
- Free Space Communications
- Military / Aerospace
- Thermal Processing

Features
- High Power Multi Chip Laser Assembly
- Fiber Bundle Assembly for low cost
- High Dynamic Range
- High Efficiency
- Red Aiming Beam Optional
- Designed for Volume Applications

SemiNex delivers the highest available power at infrared wavelengths between 13xx and 17xx nm. When necessary we will further optimize the design of our InP laser chips to meet our customers' specific optical and electrical performance needs. Diodes, bars and packages are tested to meet customer and market performance demands. Typical results and packaging options are shown. Contact SemiNex for additional details or to discuss your specific requirements.

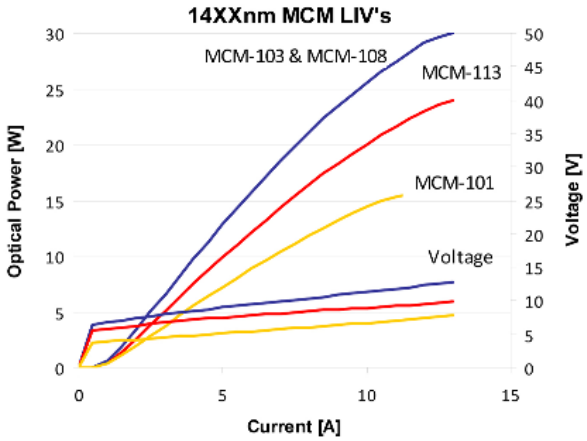

FRANKFURT LASER COMPANY
An den 30 Morgen 13, 61381 Friedrichsdorf, Germany
Tel.: +49(0)6172.27978-0 Fax: +49(0)6172.27978-10
E-mail: sales@frlaserco.com; Internet: **WWW.FRLASERCO.COM**

Specifications

1470nm Multi Chip Modules

	Symbol	MCM-101	MCM-102	MCM-103	MCM-113	MCM-138	Units
Optical							
Center Wavelength	λ_c	1465	1475	1475	1475	1475	nm (±20)
Output Power (CW)	P_o	10.00	15.00	25.00	20.00	25.00	watts
Spectral Width	$\delta\lambda$	10	15	15	15	15	nm 3dB
Slope Efficiency	η_o	1	1.6	2.8	1.2	0	W/A
Electrical							
Power Conversion Eff.	η	20.00	20.00	20.00	22.00	18.00	%
Threshold Current	I_{th}	0.7	0.7	0.7	0.7	0.7	A
Operating Current	I_{op}	7.5	11	10.5	10	10.5	A
Operating Voltage	V_{op}	6	7	11.3	9	11.3	V
Series Resistance	R_s	0.3	0.3	0.5	0.4	0.5	ohm
Lead Soldering Temp.	°C	250	250	250	250	250	°C
Optical Fiber							
Optical Fiber Core Dia.	η_o	350	350	375	375	375	µm
Optical Fiber NA		0.22	0.22	0.22	0.22	0.22	
Fiber Length		1.5	1.5	1.5	1.5	1.5	meters
Fiber Termination		SMA905	SMA905	SMA905	SMA905	None	
Aiming Beam							
Standard/Optional		Standard	Standard	Optional	Standard	Standard	
Output Power	P_a	2	2	0	2	2	mW
Wavelength	λ_a	650	650	0	650	650	nm

Specified values are rated at a constant heat sink temperature of 20°C.
**Specified operating conditions are based on 20C heat sink temperature. High temperature operation will reduce performance and MTTF.
Unless otherwise indicated all values are nominal.

• All MCM units contain monitor photodetectors to monitor lasing operation •
• Custom wavelengths available •
• Contact SemiNex for details •

1532 nm Multi Chip Modules

	Symbol	MCM-114	MCM-115	MCM-139	MCM-105	Units
Optical						
Center Wavelength	λ_c	1545	1545	1550	1550	nm (±20)
Output Power (CW)	P_o	10.0	15.0	20.0	20.0	watts
Spectral Width	$\delta\lambda$	10	10	15	15	nm 3dB
Slope Efficiency	η_o	1.2	0	2.2	2.2	W/A
Electrical						
Power Conversion Eff.	η	0.20	0.00	0.18	0.18	%
Threshold Current	I_{th}	0.7	0.7	0.7	0.7	A
Operating Current	I_{op}	9	9	10.5	10.5	A
Operating Voltage	V_{op}	6	9	10.7	10.7	V
Series Resistance	R_s	0.3	0.4	0.5	0.5	ohm
Lead Soldering Temp.	°C	250	250	250	250	°C
Optical Fiber						
Optical Fiber Core Dia.	η_o	375	375	375	375	µm
Optical Fiber NA		0.22	0.22	0.22	0.22	
Fiber Length		1.5	1.5	1.5	1.5	meters
Fiber Termination		None	None	None	None	
Aiming Beam						
Standard/Optional		Standard	Standard	Standard	Optional	
Output Power	P_a	2	2	2	0	mW
Wavelength	λ_a	650	650	650	0	nm

Specified values are rated at a constant heat sink temperature of 20°C.
**Specified operating conditions are based on 20C heat sink temperature. High temperature operation will reduce performance and MTTF.
Unless otherwise indicated all values are nominal.

• All MCM units contain monitor photodetectors to monitor lasing operation •
• Custom wavelengths available •

FRANKFURT LASER COMPANY
An den 30 Morgen 13, 61381 Friedrichsdorf, Germany
Tel.: +49(0)6172.27978-0 Fax: +49(0)6172.27978-10
E-mail: sales@frlaserco.com; Internet: **WWW.FRLASERCO.COM**

1550 nm Multi Chip Modules

	Symbol	MCM-107	MCM-106	MCM-119	MCM-108	Units
Optical						
Center Wavelength	λ_c	1555	1555	1560	1560	nm (±20)
Output Power (CW)	P_o	15.0	10.0	20.0	20.0	watts
Spectral Width	$\delta\lambda$	15	10	15	15	nm 3dB
Slope Efficiency	η_s	1.7	1	2.1	0	W/A
Electrical						
Power Conversion Eff.	η	0.20	0.00	0.19	0.00	%
Threshold Current	I_{th}	9	0.7	0.7	0.7	A
Operating Current	I_{op}	9	9	10.5	10.5	A
Operating Voltage	V_{op}	9	6	10.7	10.7	V
Series Resistance	R_s	0.4	0.3	0.5	0.5	ohm
Lead Soldering Temp.	°C	250	250	250	250	°C
Optical Fiber						
Optical Fiber Core Dia.	η_s	375	350	375	375	µm
Optical Fiber NA		0.22	0.22	0.22	0.22	
Fiber Length		1.5	1.5	1.5	1.5	meters
Fiber Termination		SMA905	SMA905	None	SMA905	
Aiming Beam						
Standard/Optional		Standard	Standard	Standard	Optional	
Output Power	P_a	2	2	2	0	mW
Wavelength	λ_a	650	650	650	0	nm

Specified values are rated at a constant heat sink temperature of 20°C.
**Specified operating conditions are based on 20C heat sink temperature. High temperature operation will reduce performance and MTTF.
Unless otherwise indicated all values are nominal.

• All MCM units contain monitor photodetectors to monitor lasing operation •
• Custom wavelengths available •

High Brightness Modules

Red Aiming Beam Included

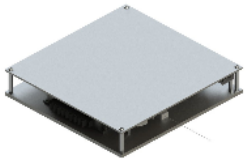

	Symbol	MCM-128	MCM-129	MCM-130	MCM-131	MCM-132	Units
Optical							
Center Wavelength	λ_c	1295	1315	1375	1480	1565	nm (±20)
Output Power (CW)	P_o	62.0	62.0	62.0	43.0	36.0	watts
Spectral Width	$\delta\lambda$	15	15	15	15	15	nm 3dB
Slope Efficiency	η_s	0	4.6	4.6	0	2	W/A
Electrical							
Power Conversion Eff.	η	21.00	21.00	21.00	15.00	12.00	%
Threshold Current	I_{th}	0.7	0.7	0.7	0.7	0.7	A
Operating Current	I_{op}	12.5	12.5	12.5	12.5	13.5	A
Operating Voltage	V_{op}	24	24	24	23.5	23.5	V
Series Resistance	R_s	0.8	0.8	0.8	0.7	0.7	ohm
Lead Soldering Temp.	°C	250	250	250	250	250	°C
Optical Fiber							
Optical Fiber Core Dia.	η_s	400	400	400	400	400	µm
Optical Fiber NA		0.22	0.22	0.22	0.22	0.22	
Fiber Length		1.5	1.5	1.5	1.5	1.5	meters
Fiber Termination		SMA905	SMA905	SMA905	SMA905	SMA905	
Aiming Beam							
Standard/Optional		Standard	Standard	Standard	Standard	Standard	
Output Power	P_a	2	2	2	2	2	mW
Wavelength	λ_a	650	650	650	650	650	nm

Specified values are rated at a constant heat sink temperature of 20°C.
**Specified operating conditions are based on 20C heat sink temperature. High temperature operation will reduce performance and MTTF.

FRANKFURT LASER COMPANY
An den 30 Morgen 13, 61381 Friedrichsdorf, Germany
Tel.: +49(0)6172.27978-0 Fax: +49(0)6172.27978-10
E-mail: sales@frlaserco.com; Internet: **WWW.FRLASERCO.COM**

No Red Aiming Beam

	Symbol	MCM-134	MCM-135	MCM-136	MCM-137	Units
Optical						
Center Wavelength	λ_c	1315	1375	1480	1565	nm (±20)
Output Power (CW)	P_o	62.0	62.0	43.0	36.0	watts
Spectral Width	$\delta\lambda$	15	15	15	15	nm 3dB
Slope Efficiency	η_o	4.6	3.6	3.6	2	W/A
Electrical						
Power Conversion Eff.	η	21.00	21.00	15.00	12.00	%
Threshold Current	I_{th}	0.7	0.7	0.7	0.7	A
Operating Current	I_{op}	12.5	12.5	13.5	13.5	A
Operating Voltage	V_{op}	24	24	23.5	23.5	V
Series Resistance	R_s	0.8	0.8	0.7	0.7	ohm
Lead Soldering Temp.	°C	250	250	250	250	°C
Optical Fiber						
Optical Fiber Core Dia.	η_o	400	400	400	400	µm
Optical Fiber NA		0.22	0.22	0.22	0.22	
Fiber Length		1.5	1.5	1.5	1.5	meters
Fiber Termination		SMA905	SMA905	SMA905	SMA905	

Specified values are rated at a constant heat sink temperature of 20°C.
**Specified operating conditions are based on 20C heat sink temperature. High temperature operation will reduce performance and MTTF.

Accessories

Accessories and Options

Single core multimode SemiNex patch cable
550um core with 600um cladding

The single core multimode SemiNex patch cable offers a solution to bundled fiber multi-chip modules. Both ends are terminated with a SMA-905 connector and are AR coated for maximum performance. Contact SemiNex for additional details or to discuss your application.

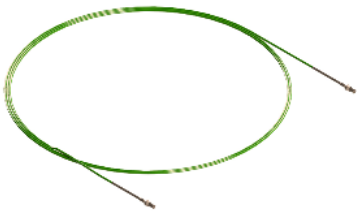

	Symbol	FBR-101	FBR-102	Units
General				
Optical Fiber Core Dia.	η_o	0	**550**	µm
Optical Fiber NA		0	0	
Fiber Length		0	1.5	meters
Fiber Termination		None	None	
Optical				
Emitter Width	W	550	550	µm
AR Coating		1470, 1532, 1550	1470, 1532, 1550	nm

Integrated Cooling System

SemiNex offers our high power multi-chip module with an integrated cooling solution. The ICS will extract up to 200 watts of thermal heat. This compact cooling system can be easily integrated with your existing controls and laser driver to reduce design time required to manage heat.

	Symbol	ICS-101	Units
Eletrical - Fan			
Operating Current	I_{op}	0	A
Operating Voltage	V_{op}	0	V
Air Flow Dischare Area	A_{dis}	≥144	cm

FRANKFURT LASER COMPANY
An den 30 Morgen 13, 61381 Friedrichsdorf, Germany
Tel.: +49(0)6172.27978-0 Fax: +49(0)6172.27978-10
E-mail: sales@frlaserco.com; Internet: **WWW.FRLASERCO.COM**

Physical Characteristics—Fiber Bundled

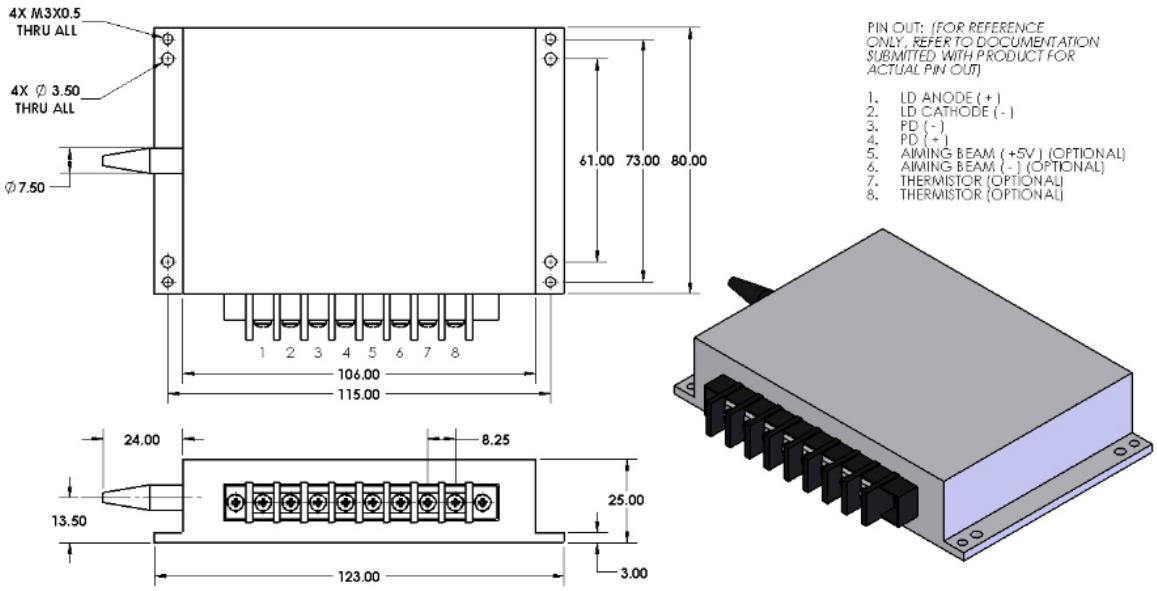

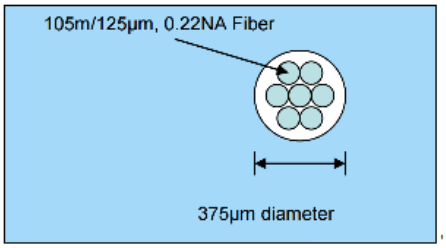

Operating Conditions: 10 to 30 C
Storage Conditions: -20 to 80 C
MCM mass: ~550g

FRANKFURT LASER COMPANY
An den 30 Morgen 13, 61381 Friedrichsdorf, Germany
Tel.: +49(0)6172.27978-0 Fax: +49(0)6172.27978-10
E-mail: sales@frlaserco.com; Internet: **WWW.FRLASERCO.COM**

Physical Characteristics—High Brightness

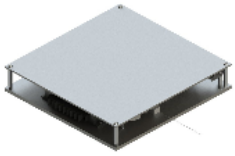

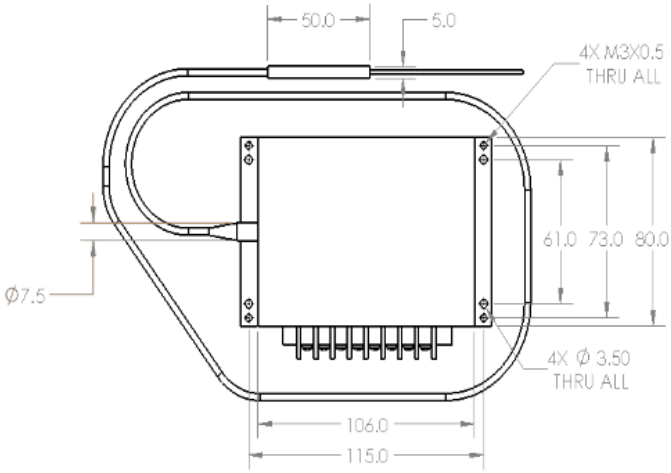

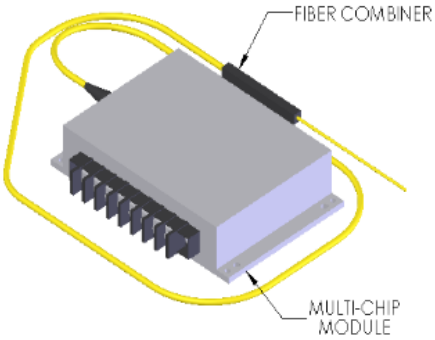

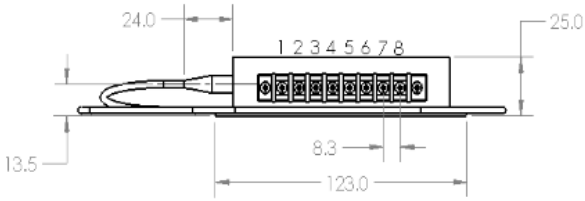

PIN CALLOUT: *(FOR REFERENCE ONLY. REFER TO DOCUMENTATION SUBMITTED WITH PRODUCT FOR ACTUAL PIN CALLOUTS)*

1. LASER ANODE (+)
2. LASER CATHODE (-)
3. ACTIVITY DETECTOR (N)
4. ACTIVITY DETECTOR (P)
5. AIMING BEAM (+5V) (OPTIONAL)
6. AIMING BEAM (-) (OPTIONAL)
7. THERMISTOR (OPTIONAL)
8. THERMISTOR (OPTIONAL)

NOTES:

1. LONG TERM BEND RADIUS, INPUT FIBERS = 25mm
2. LONG TERM BEND RADIUS, OUTPUT FIBER = 28mm
3. FIBER SHOULD EXIT COMBINER STRAIGHT FOR A MIN LENGTH OF 10mm

Physical Characteristics — 50 Watt

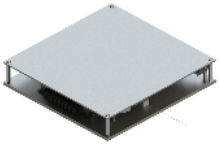

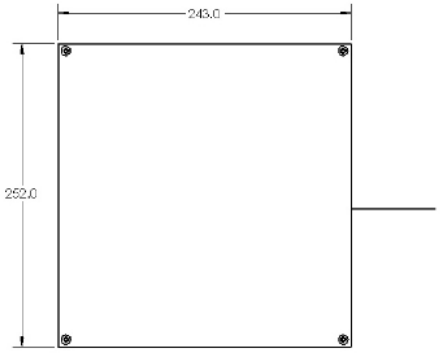

PIN OUT: *(FOR REFERENCE ONLY. REFER TO DOCUMENTATION SUBMITTED WITH PRODUCT FOR ACTUAL PIN CALLOUTS)*

1. LASER ANODE
2. LASER CATHODE
3. PD (-)
4. PD (+)
5. AIMING BEAM (+) (OPTIONAL)
6. AIMING BEAM (-) (OPTIONAL)
7. NONE
8. NONE

DETAIL A
SCALE 2 : 3

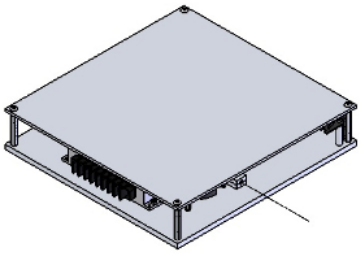

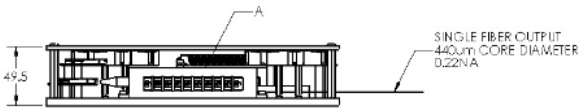

FRANKFURT LASER COMPANY
An den 30 Morgen 13, 61381 Friedrichsdorf, Germany
Tel.: +49(0)6172.27978-0 Fax: +49(0)6172.27978-10
E-mail: sales@frlaserco.com; Internet: **WWW.FRLASERCO.COM**