MITSUBISHI LASER DIODES

ML5xx71 LD SERIES

FOR DISPLAY SYSTEM

TYPE NAME

ML520G71 -01 / -02

Please note that this data sheet may be changed without any notice.

DESCRIPTION

Mitsubishi ML520G71 is a high-power, high-efficient semiconductor laser diode which provides emission wavelength of 638 nm and standard light output of 300mW.

This LD has broad-stripe structure which enables high output power.

FEATURES

- High Output Power: 300mW (CW)
- High Efficiency: 1.0mW/mA (typ.)
- Visible Light: 638nm (typ.)
- ϕ5.6mm TO-CAN PKG

APPLICATION

- Display system, Bio-medical

ABSOLUTE MAXIMUM RATINGS (Note 1)

Symbol	Parameter	Conditions	Ratings	Unit
Po	Light output power	CW	**300(Tc ≤ 45 °C), 220(45 °C < Tc ≤ 55 °C)**	mW
VRL	Reverse voltage	-	**2**	V
Tc	Case temperature	-	**-5 ~ +55**	°C
Tstg	Storage temperature	-	**-40 ~ +100**	°C

Note1: The maximum rating means the limitation over which the laser should not be operated even instant time. This does not mean the guarantee of its lifetime. As for the reliability, please refer to the reliability report issued by Quality Assurance Section, HF & Optical Semiconductor Division, Mitsubishi Electric Corporation.

ELECTRICAL/OPTICAL CHARACTERISTICS (Tc=25°C)

Symbol	Parameter	Test conditions	Min.	Typ.	Max	Unit
Ith	Threshold current	CW	**80**	**130**	**180**	mA
Iop	Operating current	CW, Po=220mW	**230**	**330**	**400**	mA
Vop	Operating voltage	CW, Po=220mW	**1.9**	**2.3**	**2.6**	V
η	Slope efficiency	CW, Po=220mW	**0.8**	**1.0**	**1.3**	mW/mA
λp	Peak wavelength	CW, Po=220mW	**632**	**638**	**644**	nm
$\theta//$	Beam divergence angle (parallel)	CW, Po=220mW	**1**	**7**	**13**	°
$\theta\perp$	Beam divergence angle (perpendicular)	CW, Po=220mW	**25**	**35**	**45**	°

These specifications are based on MITSUBISHI standard.

OUTLINE DRAWINGS

ML520G71

ϕ5.6mm

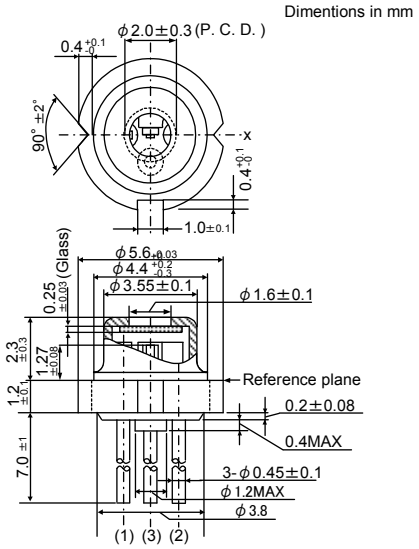

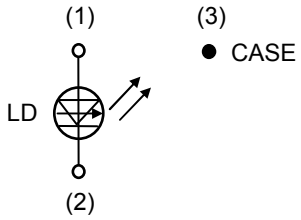

ML520G71

LD PACKING SPECIFICATION

<ML520G71-01 packing>
Each laser diode is packed in the individual envelope, Al coated of inside.

<ML520G71-02 packing>
Laser diode is inserted in an electrically conductive tray made of polystyrene.
Each laser diode-tray includes 200pcs LDs, in the maximum.

Safety precaution relating to handling of optical semiconductor device

General:
Although the manufacturer is always striving to improve the reliability of its products, problems and errors may occur with semiconductor products. Hence, it is required so that the user's products are designed with full regard to safety by incorporating the redundancy, fire prevention, error prevention so that any problems or error with a semiconductor product does not cause any accidents resulting in injury or death, fire, or environmental damage. The following requirements must be strictly observed.

Warning!

1. Avoid laser light entering the eyes
In normal operation the semiconductor laser device, an optical device, emits laser light. Laser light entering the eye causes extreme danger. Never look directly at the laser light, and never look it directly through an optical system such as a lens. Use an ITV camera or IR viewer to observe the laser light. Mitsubishi recommend that the customer should express their products containing laser device with class III B, which might injure eyes.

2. Handling of the product
This product uses GaAs (gallium arsenide). In normal be conditions this product is not toxic. However, if it is powdered or vaporized, its powder or vapor is dangerous to humans. Never attempt to crush, grind, bake or chemically treat this product. Do not put this product into your mouth or swallow it.

3. Discarding the product
This product uses GaAs (gallium arsenide). It should be discarded as a specially controlled industrial waste, it should be separated from general industrial and household wastes according to the "Law of Wastes and Cleaning".

Caution!

1. High temperature
During operation the product may become hot. Therefore do not touch it directly during operation. The product will remain hot even after the power is turned off, so wait until it cools before you touch it. Otherwise burns may be caused. Never place any inflammable substance that may cause a fire near the product.

Handling Cautions for Optoelectronic Devices

1. General

(1-1) The products described in this specification are designed and manufactured for use in general communication systems or electronic devices, unless their applications or reliability are otherwise specified. Therefore, they are not designed or manufactured for installation in devices or systems that may affect human life or that are used in social infrastructure requiring high reliability.

(1-2) When the customer is considering to use the products described in this specification in special applications, such as transportation systems (automobiles, trains, vessels), medical equipments, aerospace, nuclear power control, and submarine repeaters or systems, please contact Mitsubishi Electric or an authorized distributor.

2. Storage Conditions

When storing the products, it is recommended to store them following the conditions described below without opening the packing. Not taking enough care in storing may result in defects in electrical characteristics, soldering quality, visual appearance, and so on. The main points are described below (if special storage conditions are given to the product in the specification sheet, they have priority over the following general cautions):

(2-1) Appropriate temperature and humidity conditions, i.e., temperature range between 5～35 °C, and humidity between 45～75 percent RH, should be maintained in storage locations. Controlling the temperature and humidity within this range is particularly important in case of long-term storage for six months or more.

(2-2) The atmosphere should be particularly free from toxic gases and dust.

(2-3) Do not apply any load on the product.

(2-4) Do not cut or bend the leads of the devices which are to be stored. This is to prevent corrosion in the cut or bent part of the lead causing soldering problems in the customer's assembling process.

(2-5) Sudden change in temperature may cause condensation in the product or packing, therefore, such locations should be avoided for storing. Temperature in storage locations should be stable.

(2-6) Storage conditions for cap-less products shall be stated separately because these products require stricter controls than package sealed products.

3. Design Conditions and Environment under Use

(3-1) Operation in excess of the absolute maximum ratings can cause permanent damage to the device. The customers are requested to design not to exceed those ratings even for a short time.

(3-2) Avoid use in locations where water or organic solvents adhere directly to the product, or where there is any possibility of the generation of corrosive gas, explosive gas, dust, salinity, or other troublesome conditions. Such environments will not only significantly lower the reliability, but also may lead to serious accidents.

(3-3) Quality assurance for cap-less products shall be stated separately because these products require more notice in your line and your products environment than package sealed products.

4. Static Electric Safety Cautions

The optoelectronic devices are sensitive to static electricity (ESD, electro-static discharge). The product can be broken by ESD. When handling this product, please observe the following countermeasures:

<Countermeasures against Static Electricity and Surge>

To prevent break of devices by static electricity or surge, please adopt the following countermeasures in the assembly line:

(4-1) Ground all equipments, machinery jigs, and tools in the process line with earth wires installed in them. Take particular care with hot plates, solder irons and other items for which the commercial power supplies are prone to leakage.

(4-2) Workers should always use earth bands. Use of antistatic clothing, electric conductive shoes, and other safety equipment while at work is highly recommended.

(4-3) Use conductive materials for this product's container, etc.

(4-4) It is recommended that grounding mats be placed on the surfaces of assembly line workbench and the surrounding floor in work area, etc.

(4-5) When mounting this product in parts or materials which can be electrically charged (printed wiring boards, plastic products, etc.), pay close attention to the static electricity in those parts. ESD may damage the product.

(4-6) Humidity in working environment should be controlled to be 40 percent RH or higher. These countermeasures are most general, and there is a need to carefully confirm the line using this product. It is extremely important to prevent surge, eliminate it rapidly, and prevent it from spreading.