FPYL-488-XXT-XS

Blue Diode Laser with Integrated Electronics

Specifications

Wavelength (nm)	488±5
Output Power (mW)	1 - 50*
Transverse Mode	near TEM_{00}
Operating Mode	CW
Power Stability (RMS, over 4 hours)	<1%, <2%, <3%*
Noise of Amplitude (RMS, 20Hz – 20MHz)	<1% (<0.5% optional)
M^2 Factor	<1.2
Beam Diameter at the Aperture ($1/e^2$) (mm)	~1.2
Beam Divergence (full angle) (mrad)	<1.0
Polarization Ratio	>50:1 (horizontal) (>100:1 optional)
Warm-up Time (minutes)	<5
Beam Height from Base Plate (mm)	19
Input Voltage (V)	+12 (DC)
Modulation	DMOD (TTL) or AMOD (Analog) up to 1MHz
	DMOD+ AMOD (TTL + Analog)
Operating Temperature (°C)	10 - 35
Expected Lifetime (hours)	10000

* To be specified

Note: The laser head has to be used on a heat sink with good heat dissipation.

FRANKFURT LASER COMPANY
An den 30 Morgen 13, 61381 Friedrichsdorf, Germany
Tel.: +49(0)6172.27978-0 Fax: +49(0)6172.27978-10
E-mail: sales@frlaserco.com; Internet: **WWW.FRLASERCO.COM**

Laser Head Drawing

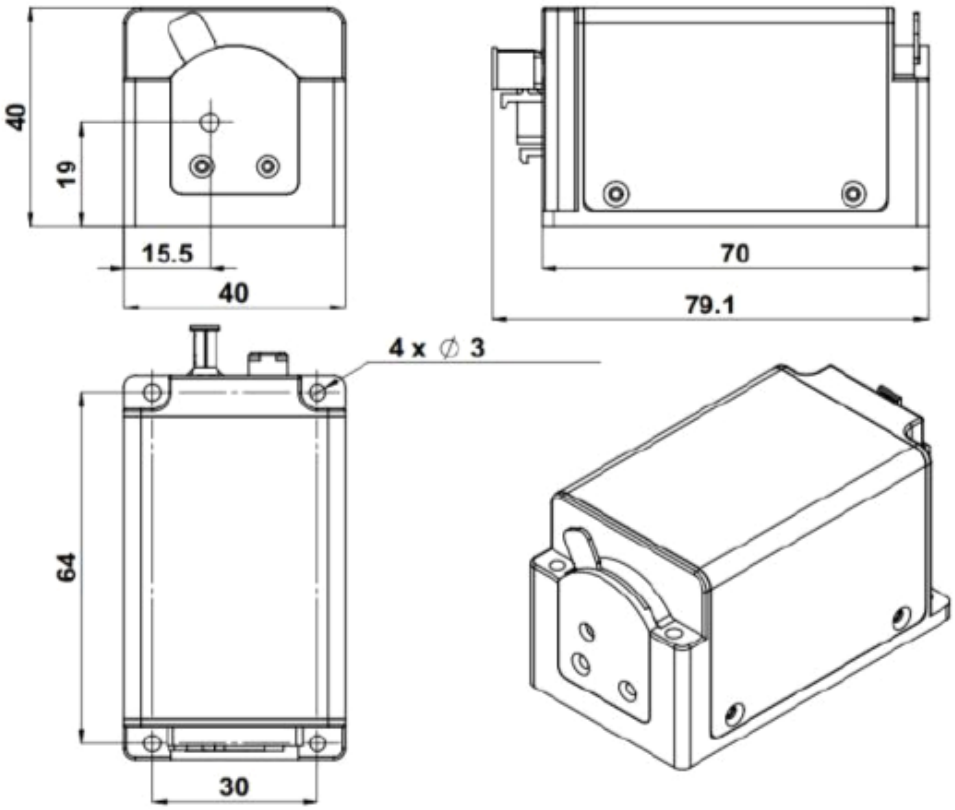

79.1(L) ×40(W) ×40 (H) mm^3, 0.2kg

Power Supply Drawing

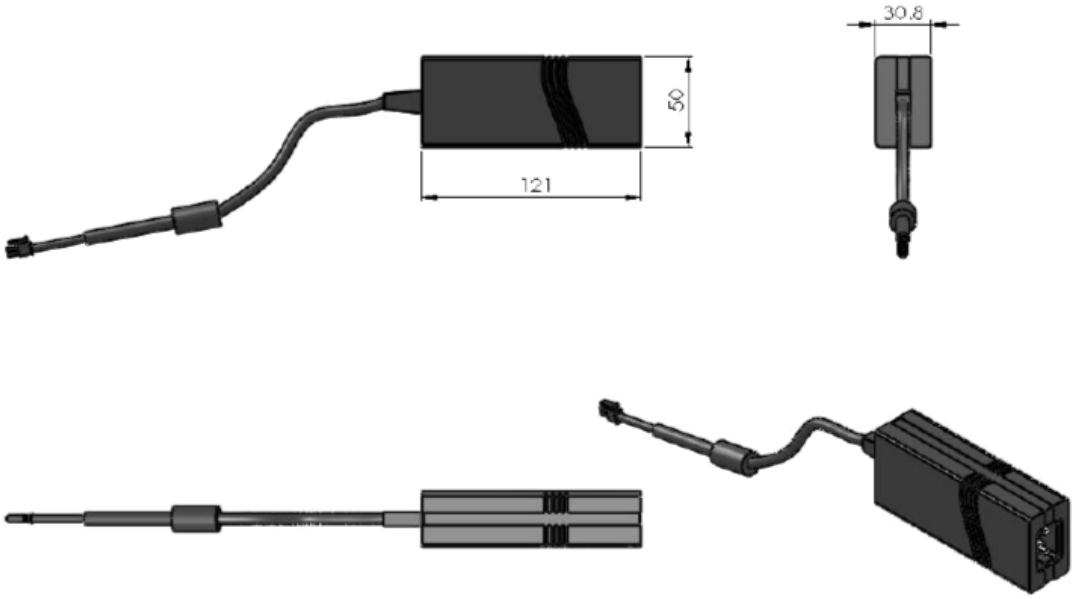

121(L) ×50(W) ×30.8 (H) mm^3, 0.3kg

FRANKFURT LASER COMPANY
An den 30 Morgen 13, 61381 Friedrichsdorf, Germany
Tel.: +49(0)6172.27978-0 Fax: +49(0)6172.27978-10
E-mail: sales@frlaserco.com; Internet: **WWW.FRLASERCO.COM**